Dual Vaporizer Assemblies for Axcelis

Glemco Inc.

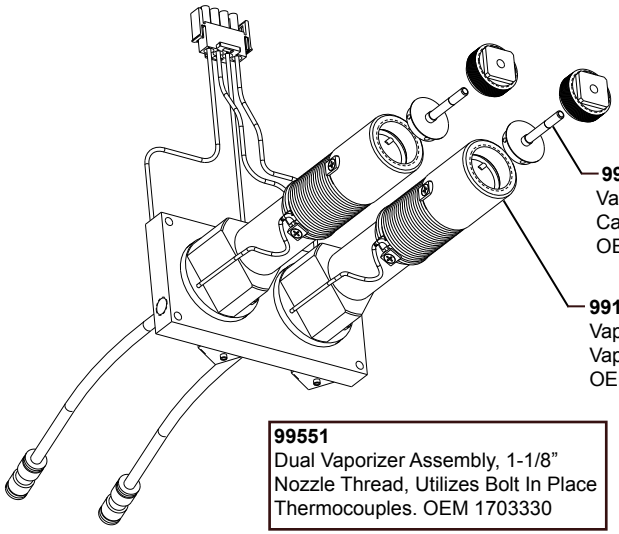

99024
Vaporizer Nozzle Retainer Cap, 1-1/8" OD Thread
OEM 1706380

99179B
Vaporizer Nozzle, Fits Vaporizers W/ 1-1/8" ID Thread
OEM 17033341

99551
Dual Vaporizer Assembly, 1-1/8" Nozzle Thread, Utilizes Bolt In Place Thermocouples. OEM 1703330

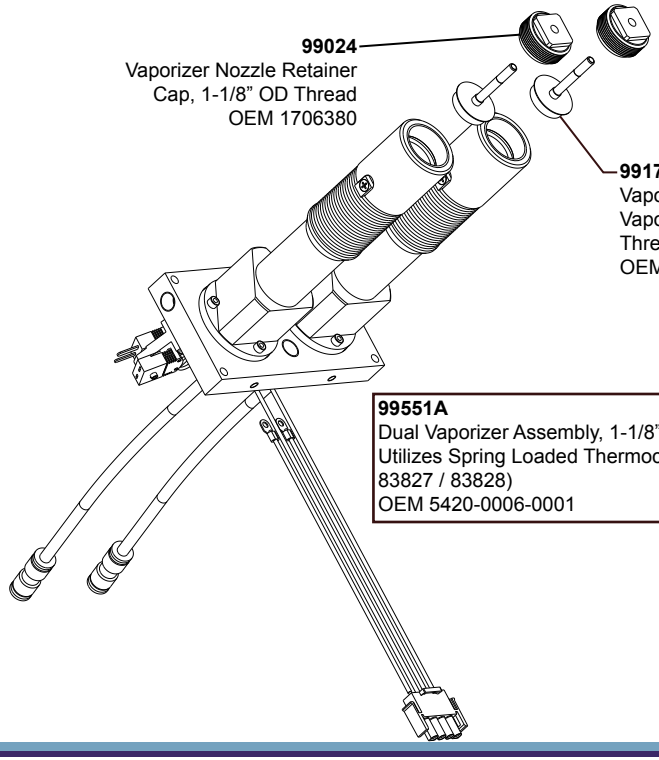

99024
Vaporizer Nozzle Retainer Cap, 1-1/8" OD Thread
OEM 1706380

99179B
Vaporizer Nozzle, Fits Vaporizers W/ 1-1/8" ID Thread
OEM 17033341

99551A
Dual Vaporizer Assembly, 1-1/8" Nozzle Thread, Utilizes Spring Loaded Thermocouples (P/N's 83827 / 83828)
OEM 5420-0006-0001

DUAL VAPORIZER COMPONENTS

Vaporizer Nozzle Retainer Cap, 1-1/8" OD Thread
P/N 99024 / OEM 1706380

Vaporizer Nozzle Retainer For SB
P/N 99147 / OEM 1739150

Vaporizer Nozzle Retainer Cap 1-1/4" OD Thread
P/N 99337 / OEM 17036190 Rev. B

Vaporizer Heat Shield
P/N 99336 / OEM 1152240

Vaporizer Nozzle, W/ 1-1/8" ID Thread
P/N 99116 / OEM 1706370

Vaporizer Nozzle, For SB
P/N 99146 / OEM 1739160

Vaporizer Nozzle For SB
P/N 99146A / OEM 1152620

Vaporizer Nozzle, 1-1/8" OD Thread
P/N 99179 / OEM 17033340

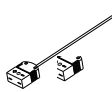

Thermocouple Probe, 6" Male Connector
P/N 83830 / OEM 1210070

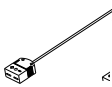

Thermocouple Probe, 6" Female Connector
P/N 83830F / OEM 1210060

Vaporizer Thermocouple, Male Connector (Spring Loaded)
P/N 83827 / OEM 7435-0010-0001

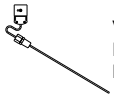

Vaporizer Thermocouple, Female Connector (Spring Loaded)
P/N 83828 / OEM 7435-0011-0001

Vaporizer Crucible
P/N 99145A / OEM N/A

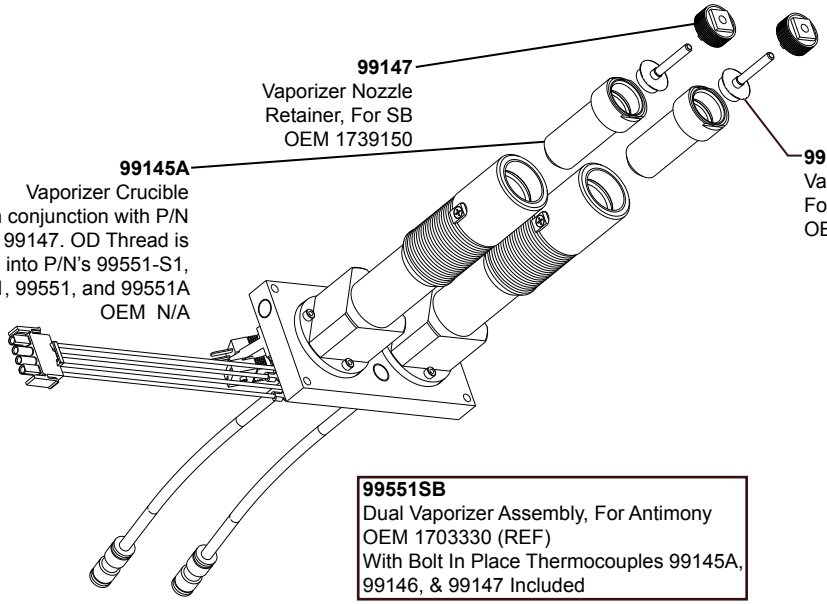

99147
Vaporizer Nozzle Retainer, For SB
OEM 1739150

99145A
Vaporizer Crucible
Used in conjunction with P/N 99146 and 99147. OD Thread is 1-1/8". Fits into P/N's 99551-S1, 99551A-1, 99551, and 99551A
OEM N/A

99146A
Vaporizer Nozzle For Sb
OEM 1152620

99551SB
Dual Vaporizer Assembly, For Antimony
OEM 1703330 (REF)
With Bolt In Place Thermocouples 99145A, 99146, & 99147 Included