Replacement Components For Varian VIISta ™810 Ion Source
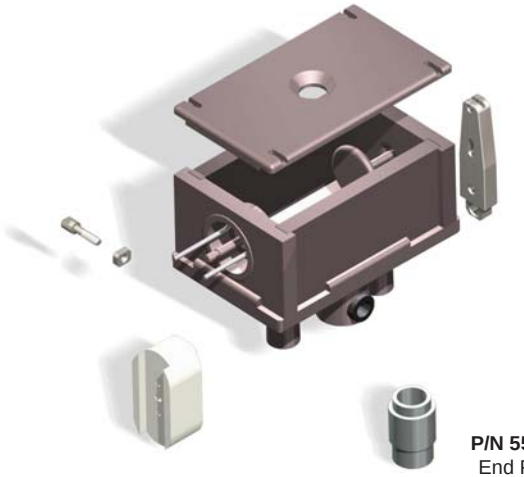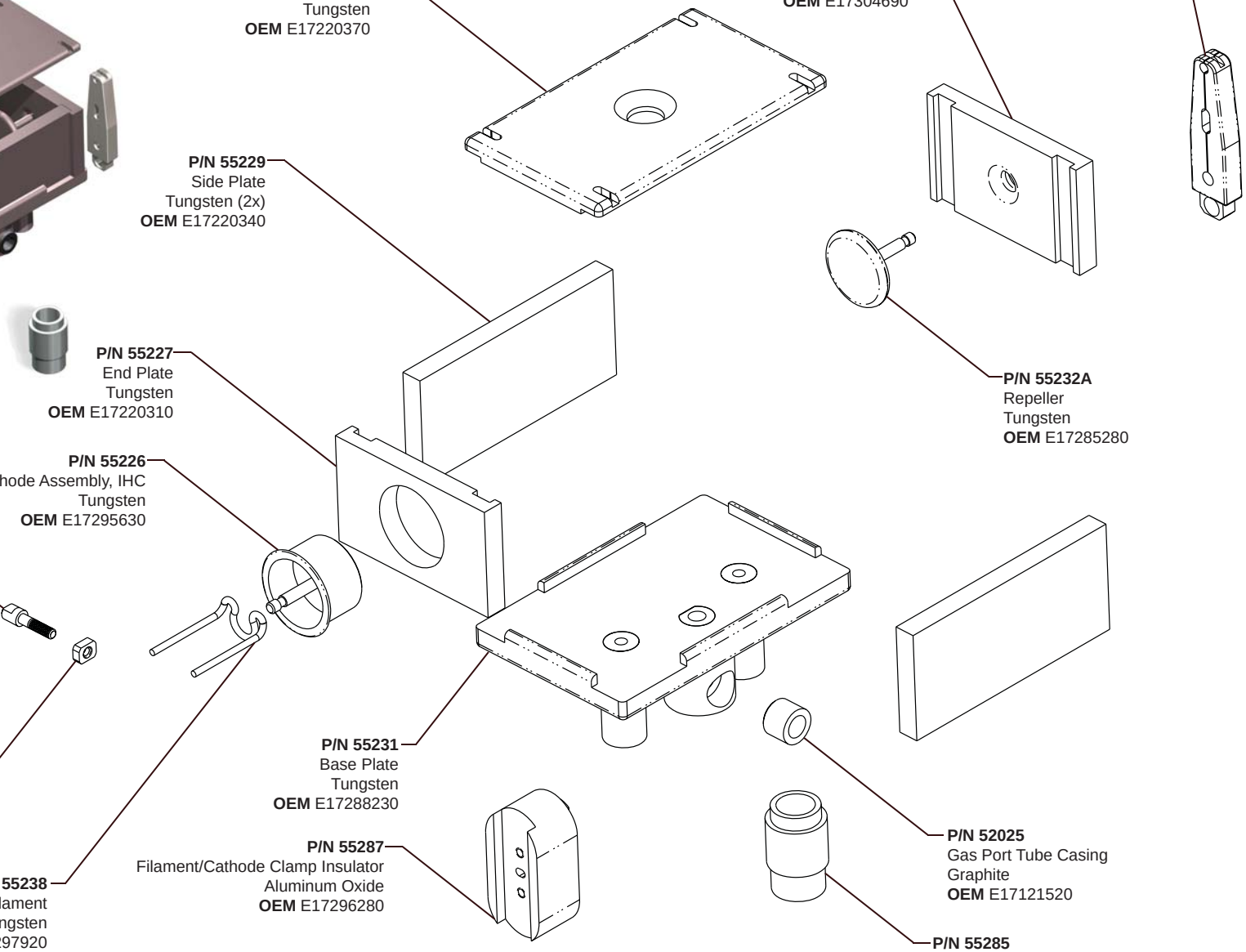
Glemco Inc.